Autumn 2026 - Lab 2

42059 41034 - Electronic Components and Fabrication

This lab tutorial builds on the previous lab by combining the NMOS and PMOS characteristics to build the most basic CMOS logic circuit – the inverter / NOT gate. By analysing the NOT gate using the simulator, you will explore the working principle of CMOS logic. You will also explore the layout design of the inverter using the L-Edit IC app. This lab comprises the following exercises:

Exercise 1: Performing a transient analysis of the inverter at the Schematic Capture level

Exercise 2: Static analysis of the inverter

Exercise 3: Creating an inverter layout using the L-Edit IC app.

Exercise 1: Transient Analysis of an inverter

Create a circuit schematic of a CMOS inverter driving by a pulsed source as illustrated in the following figure.

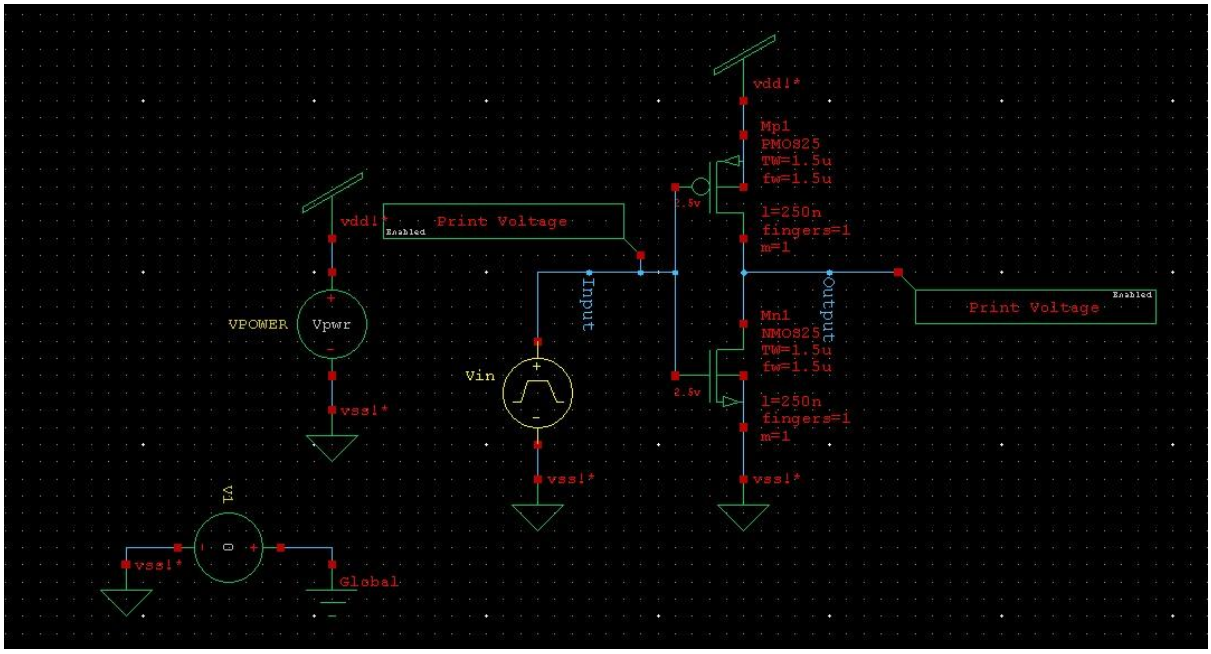

- Select PMOS25x and NMOS25x
- Vss!* = Vss_inherit in Misc
- Vdd!* = Vdd_inherit in Misc
- Vin = V_pulse in SPICE_sources
- Print voltage = V_VoltagePrint in SPICE_Plot

For the Vin, set the properties Delay = 0, Rise time = 0, Fall time = 0, Period = 20 ns and VHigh= Vpwr.

Set a new testbench TSP_Transient and setup simulation as below:

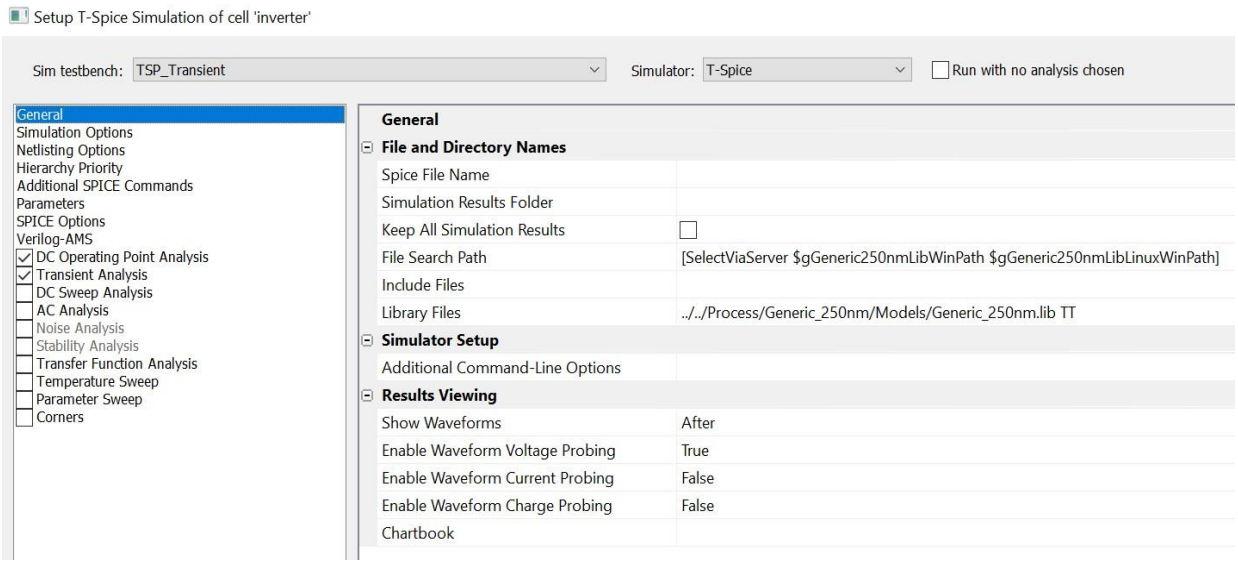

Set the parameter ‘Vpwr’ as 2.5 V. This is the VDD / power supply of the circuit (i.e., logic 1).

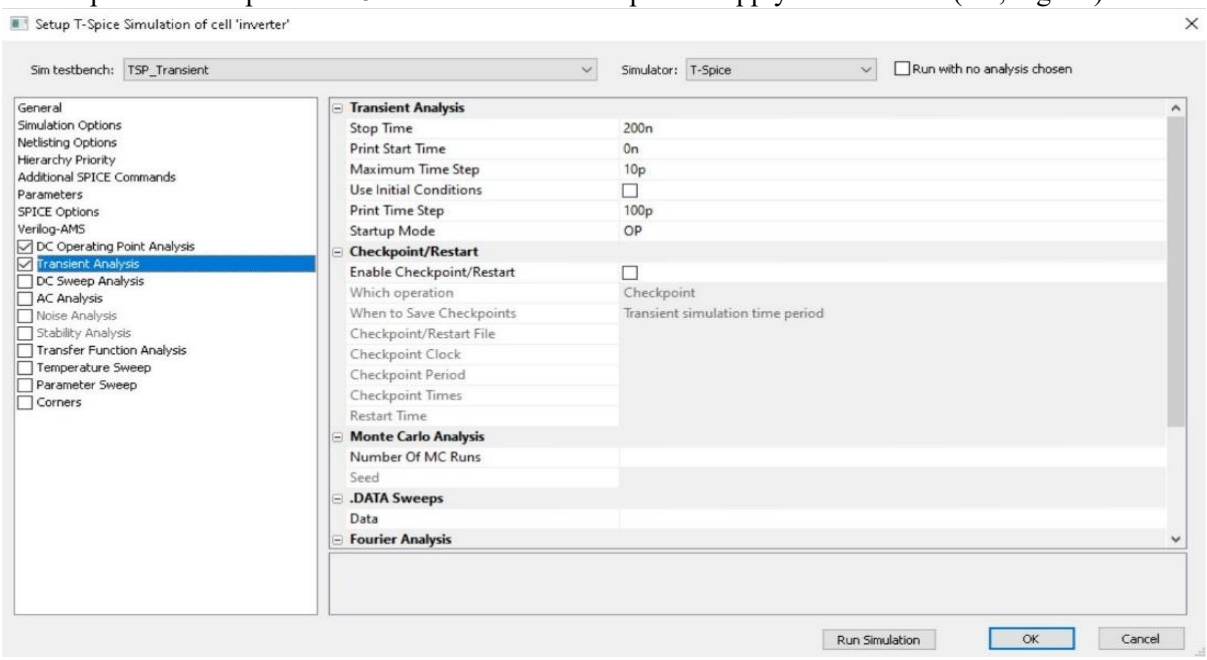

Output waveform

Note: Use the ‘put selected traces on separate plots’ to display input and output separately

Once you have obtained the output waveforms, measure the output Rise time and Fall time using the ‘Spice measure’ components ‘TRAN_RiseTime’ and ‘TRAN_FallTime’ and display the values in the T-SPICE window.

Set the **name** of the TRAN_RiseTime in the properties window as **MeasureRiseTime_1** and TRAN_FallTime in the properties window as **MeasureFallTime_1**

Include your results in the lab report, as well as stating the rise and fall time measured. Comment on how waveforms indicate that the circuit is behaving as an inverter.

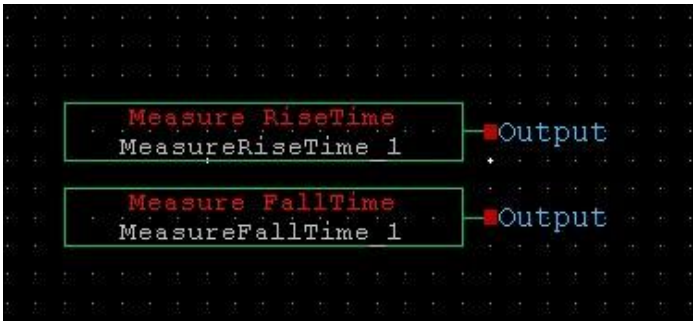


```
Measurement result summary
   MeasureRiseTime_1 =    45.1523p
   MeasureFallTime_1 =    17.2474p
```

Exercise 2: Static analysis of inverter

Having examined the dynamic behaviour of the inverter, we will now look at the static behaviour of the same inverter.

Create a new schematic based on the one above, but now replacing Vin with a DC source instead, of which you will sweep the voltage. As with the previous lab, given that you are going to sweep the voltage value, use a parameter instead of hardcoding the value of Vin, e.g. "Vin_Para".

Enter a Current Probe to monitor I_{DS}. **Include the completed schematic in your lab report.**

Set the variable Vin to sweep from low to high.

Run the simulation.

Create two plots: One plot showing the transfer characteristic (V_{out} vs V_{in}), and another plot showing I_{DS} vs V_{in}. **Include the two plots in your lab report. By annotating the IDS vs Vin graph, indicate where maximum power consumption occurs.**

Also comment on the skewness of the inverter's transfer characteristic and relate it to the Beta ratio (*see lecture notes*) derived using the ID vs VDS curves from both the NMOS and PMOS simulated from the previously lab. Comment on how you would correct the skewed characteristic such that the threshold voltage is VDD/2 (*see lecture notes*). Then adjust the PMOS geometric parameters to validate by including the updated transfer curve.

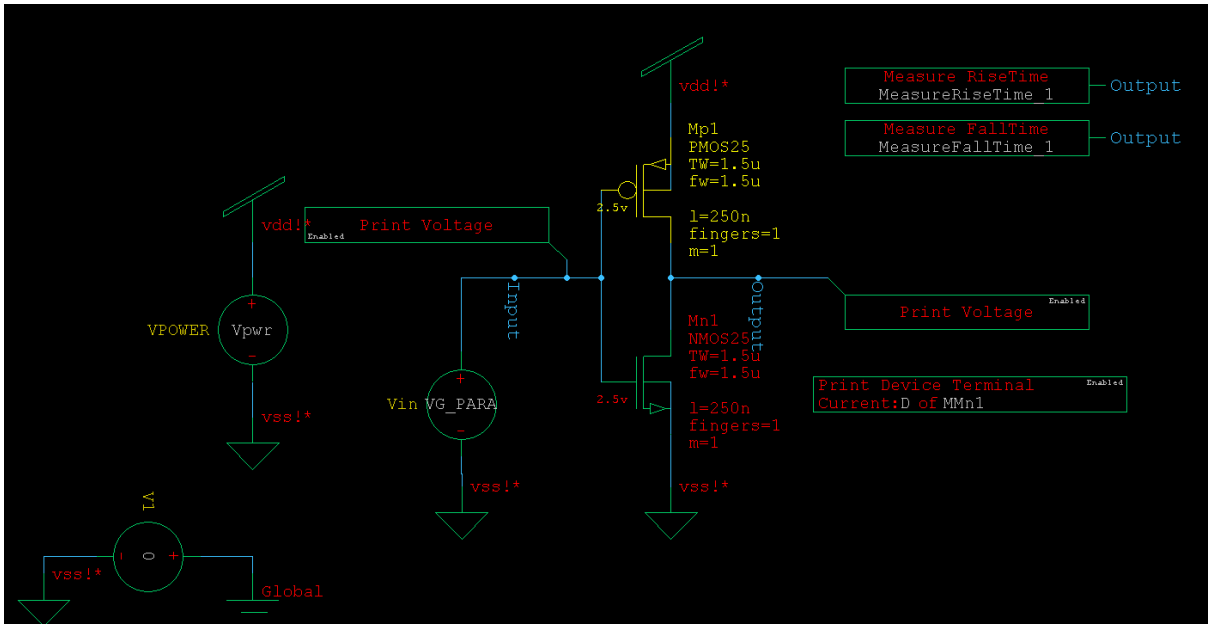
vdd!*
Measure RiseTime
MeasureRiseTime_1
Output
Measure FallTime
MeasureFallTime_1
Output
Mp1
PMOS25
TW=1.5u
fw=1.5u
l=250n
fingers=1
m=1
2.5v
vdd!*
Enabled
Print Voltage
VPOWER
Vpwr
vss!*
Input
Output
Mn1
NMOS25
TW=1.5u
fw=1.5u
l=250n
fingers=1
m=1
2.5v
Print Voltage
Enabled
Print Device Terminal
Current:D of MMn1
Enabled
Vin VG_PARA
vss!*
vss!*
V1
0
vss!*
Global

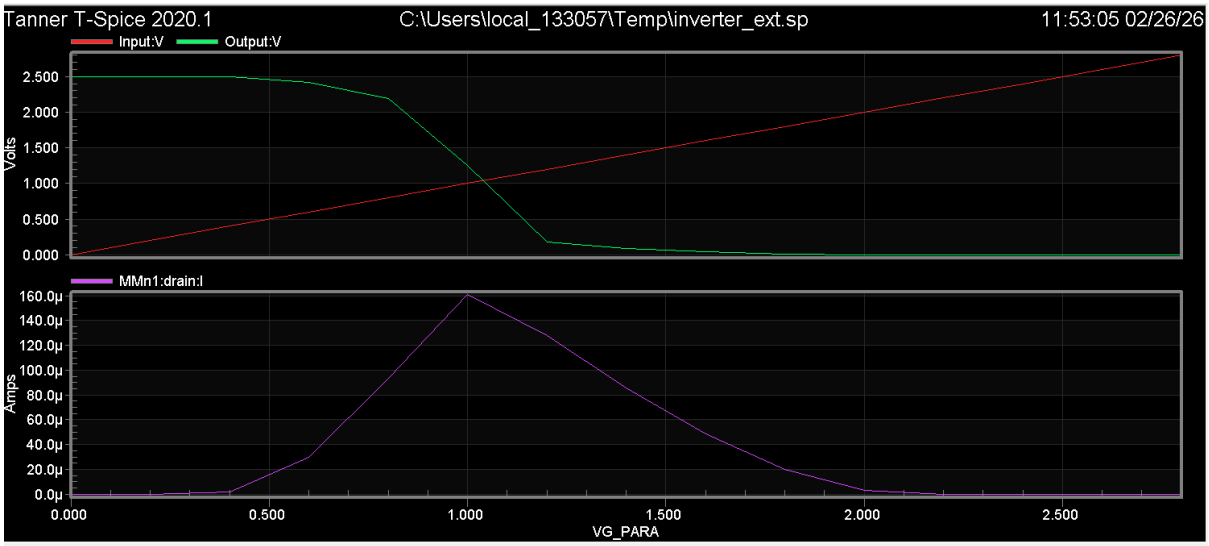
Tanner T-Spice 2020.1
C:\Users\local_133057\Temp\inverter_ext.sp
11:53:05 02/26/26
Input:V
Output:V
Volts
2.500
2.000
1.500
1.000
0.500
0.000
MMn1:drain:I
Amps
160.0µ
140.0µ
120.0µ
100.0µ
80.0µ
60.0µ
40.0µ
20.0µ
0.0µ
0.000
0.500
1.000
1.500
2.000
2.500
VG_PARA

Correcting the skewed characteristic such that the threshold voltage is ~VDD/2

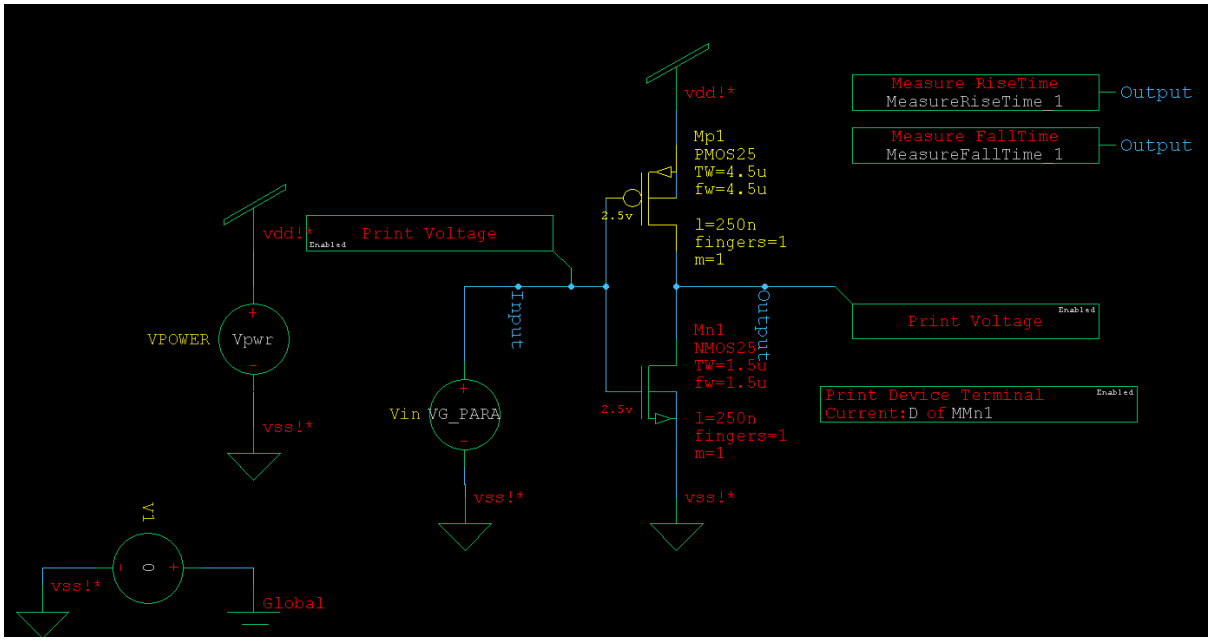

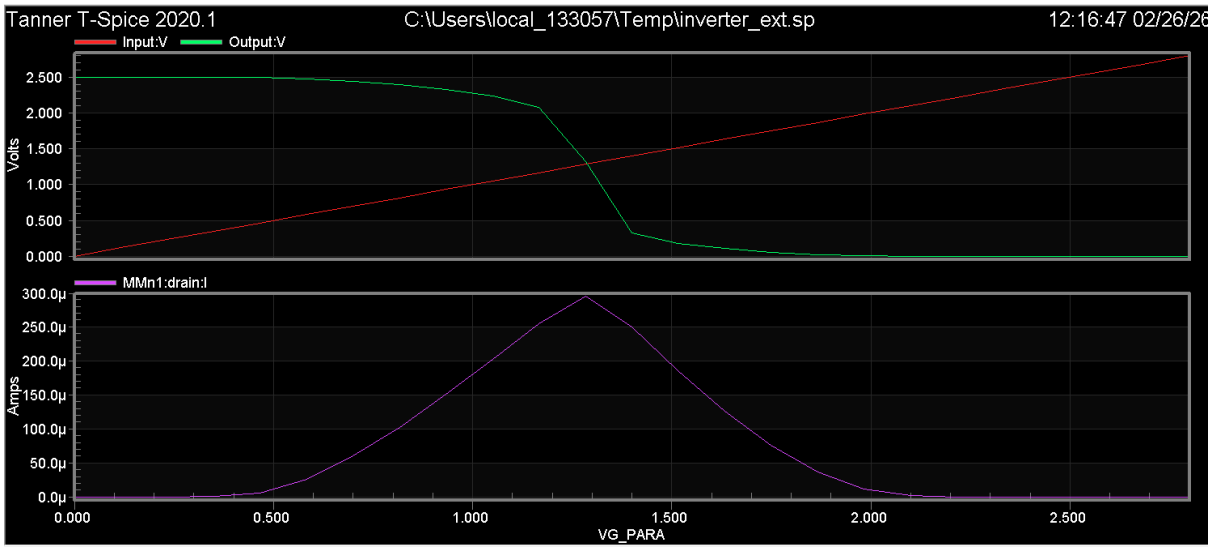

Exercise 3: Inverter layout by L-Edit

In this final exercise, you will learn to create a layout for a CMOS invertor. This will involve the following parts:

Part 1 and 2: Setting up a new layout file.

Part 3: Drawing in the transistor pair comprising an NMOS and PMOS.

Part 4: Drawing in the interconnects for the supply terminals.

Part 5: Adding labels to the terminals.

Part 1 – Launch L-Edit

Mentor Graphics > Ledit IC v2020.1

Part 2 - Create new Layout file

1. File > Open > TannerEDA > TannerTools_v2020.1 > Tutorials > Tutorial.tdb (Tanner database file).
2. Cell > New view > create a new cell for your inverter layout and call it 'your name_inverter'.

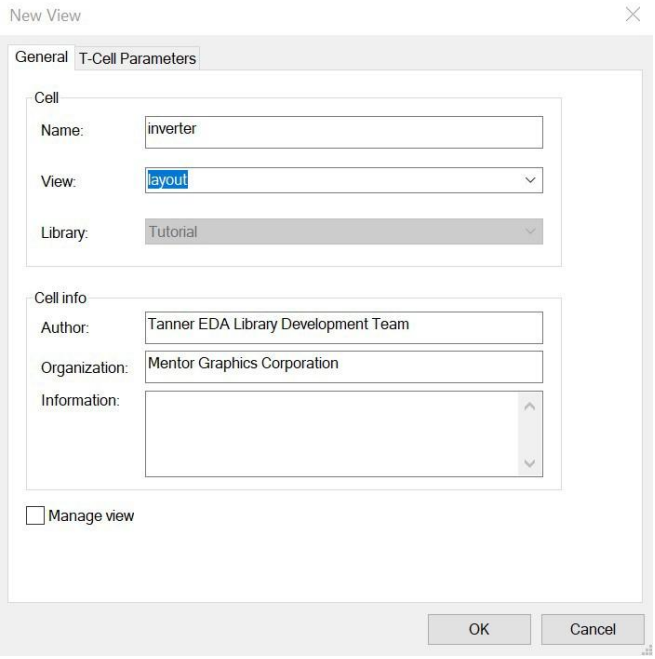

3. From Setup > Design, the library and grid setup are shown.

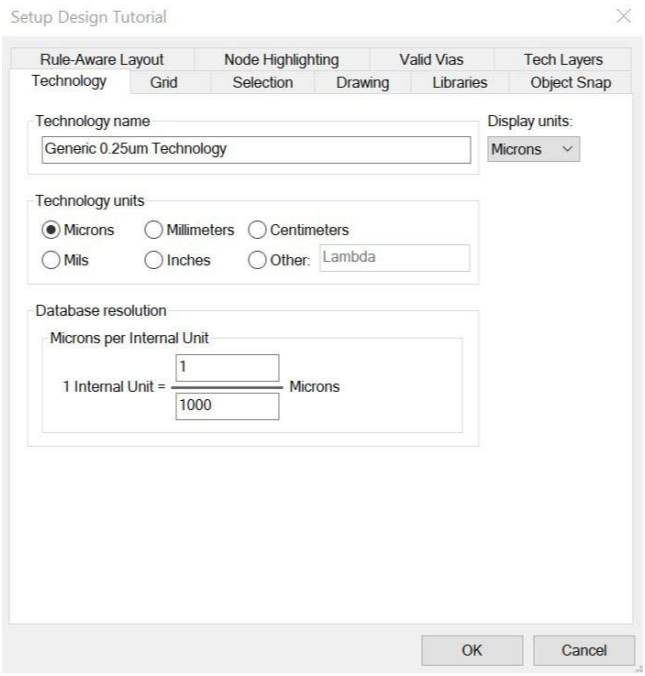

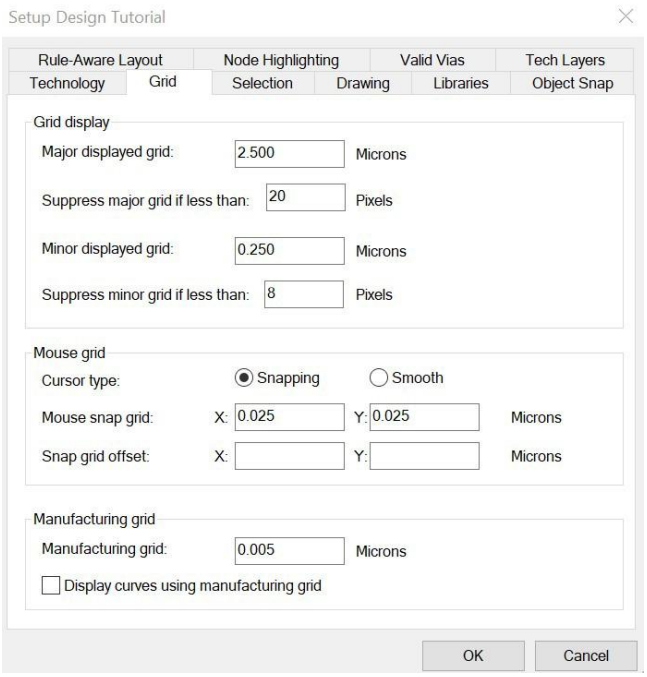

Note: Leave it as default settings. Control + scroll up to view the grid.

Part 3 - Drawing PMOS and NMOS

Using the *shape tool* from the top-bar and the *layer-palette* from the side-bar, and the requirements mentioned below, draw the inverter layout.

Some quick tricks:

Use ctrl + scroll wheel to zoom in and zoom out

To resize an object, select the object with the left mouse button, hold the ALT key and use the left mouse button to drag a side of the object.

To move an object, select the object with the left mouse button, hold the ALT key and use the left mouse button to drag the object.

Note: The goal is to create a minimum physical implementation of all the layout designs, and to use minimal wires, transistors, contacts, etc. Not doing so will decrease circuit speed and performance as well as increase circuit size.

Referring to the figures below;

For PMOS, First, layout a layer of N-well (n-substrate). Then put a layer of P-Implant (P symbolising Phosphorus as the donor). On the area of the P-Implant, add an appropriate-sized Active layer. Now put a layer of Poly for the gate. Draw Metal 1 and Contacts.

PMOS

1. From the layer palette on the left, choose N-Well, and select the *box* from the drawing tool bar to draw N-well.
2. In the N-Well area, draw P-Implant.
3. Draw Active.
4. Draw Poly.
5. Draw Metal1
6. Draw Contacts

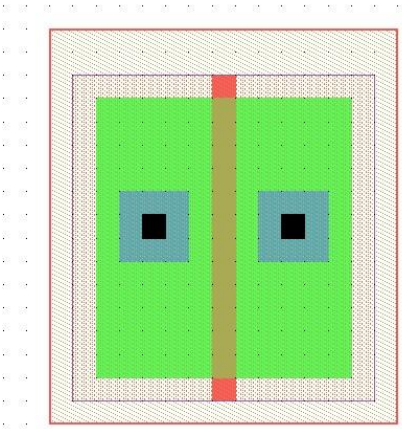

For NMOS, there is no need to layout a P-well or p-substrate when laying out an NMOS. The empty grid of L-edit represents a P-well or p-substrate. First layout a layer of N-Implant. On area designated N-Implant, add an appropriate-sized Active layer. Now put a layer of Poly for the gate.

NMOS

1. Do not need to draw P-Well because the empty grid of L-Edit stands for P-Well.
2. Draw N-Implant.
3. Draw Active.
4. Draw Poly.
5. Draw Metal1
6. Draw Contacts

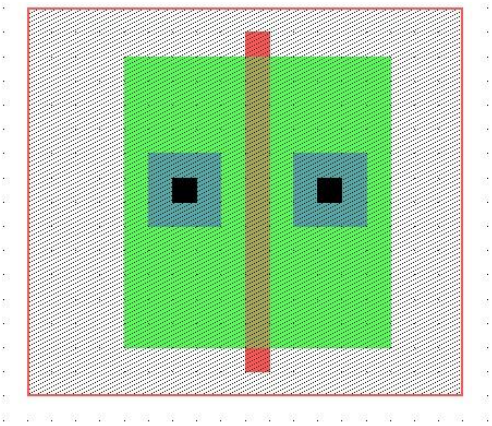

Now, connect the Gates of the PMOS and NMOS by extending the Poly (Alt + drag the side) Connect the Drain of the PMOS to the Drain of the NMOS by extending the Metal1.

Part 4 - Draw VDD and GND

The substrate/bulk needs to be connected to Vdd for PMOS and Gnd for NMOS. For PMOS, place a small N-Implant *(NOT P-Implant)* on the N-well substrate, and add a small Active layer. From this Active layer, put a Contact to a Metal 1 layer that connects to VDD. Connect the source of PMOS to VDD by Metal 1. For NMOS, on the P-well substrate place a small PImplant, followed by an Active layer. From this Active layer put a Contact to a Metal 1 layer that connects to Gnd. Connect source of NMOS to Gnd by Metal 1.

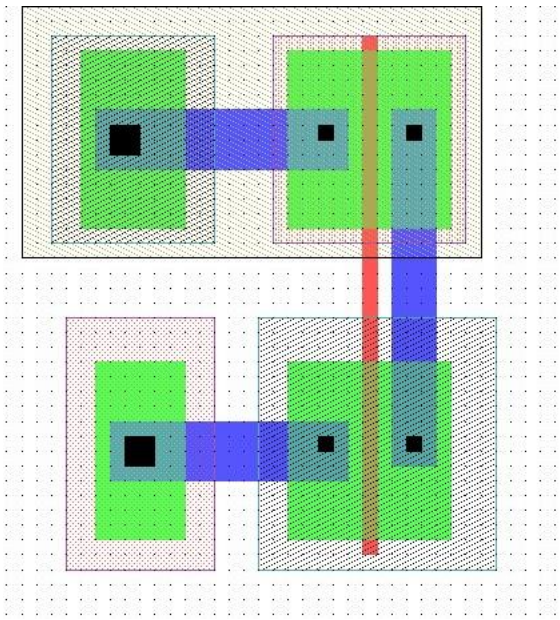

Part 5 - Labelling

Label the INPUT (poly), OUTPUT (Metal1), Vdd (metal1) and Gnd (Metal1) using from toolbar and size as 0.5 microns.

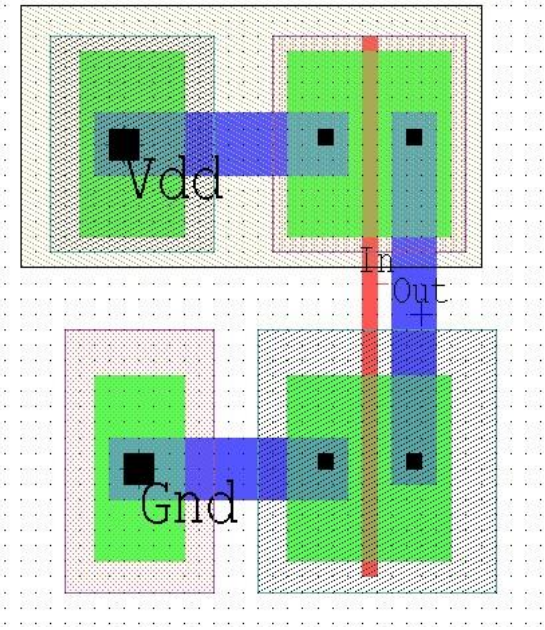

Final layout of inverter

Include the final layout of the inverter in your lab report, labelling the following: Source (S), Drain (D), Gate (G), Bulk/Body (B), NMOS, PMOS. Briefly outline how you would modify your layout such that the Beta ratios are equal to realise a threshold at VDD/2. Search the internet for CMOS inverter layouts. What other ways are there to layout a CMOS inverter?